DRAWING FOR RCC SPECIAL TYPE MANHOLE (WITH DROP CONNECTION AND HIGH FLOOD PROTECTION SYSTEM)

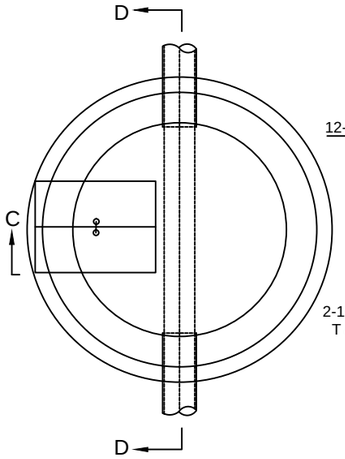

PLAN

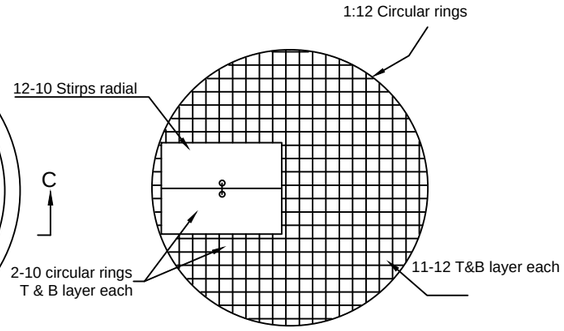

SECTION BB

DETAIL 'C'

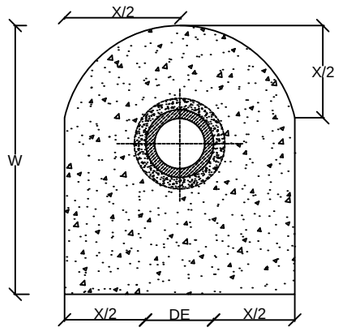

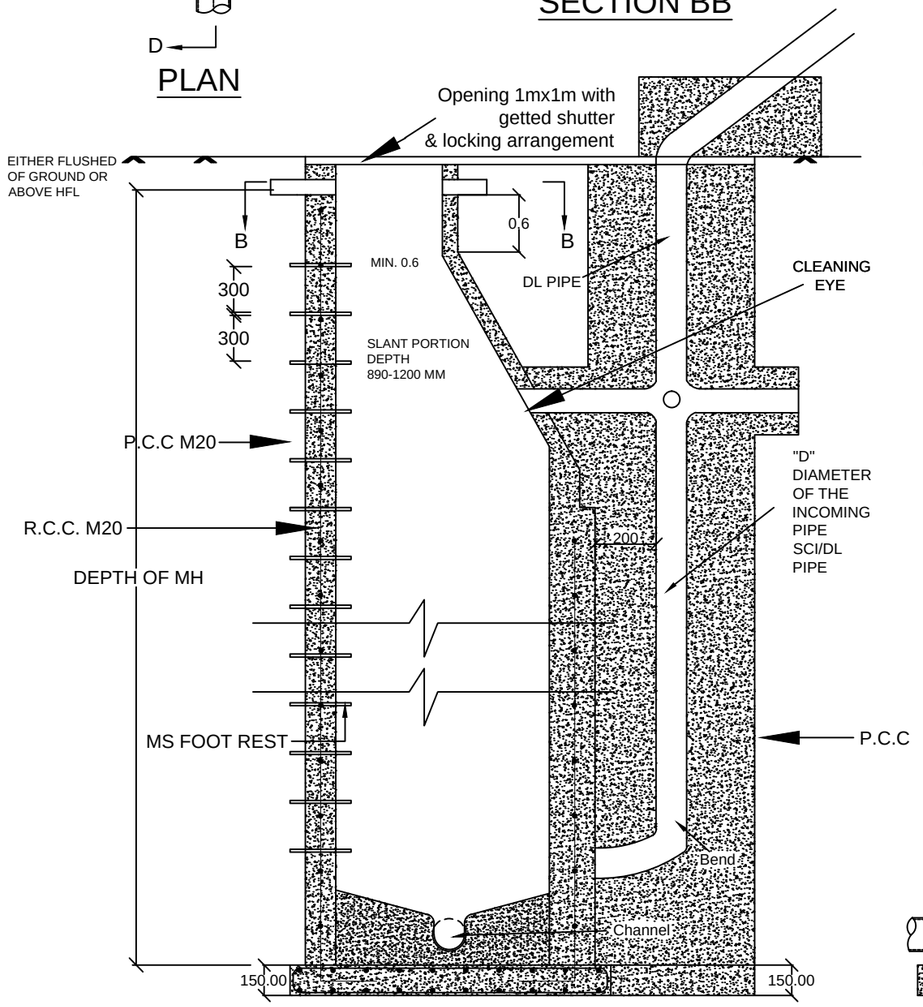

SECTION CC

(For sewers of 900 to 2000 mm Dia.)

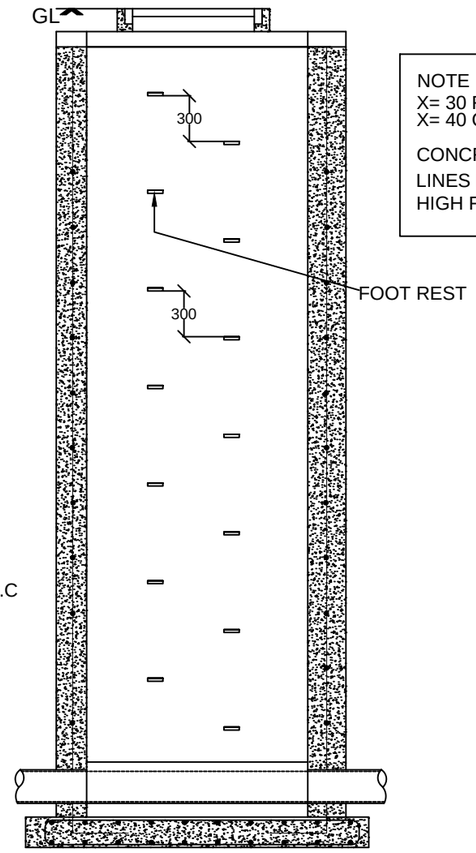

SECTION DD

NOTE
X= 30 FOR DEPTH UP 1.2 M
X= 40 CM FOR BEYOND 1.2 NO.

CONCRETE AROUND / HAUNCHES TO BE PROVIDE FOR LINES LIKELY TO BE EFFECTED DUE TO HIGH DUE TO HIGH FLOOD

D-18

N

LEGENDS

SIGNATURE OF OFFICIALS

NAME OF OFFICER	SIGN WITH SEAL

TABLE

Outgoing sewer in manhole	Dia(d) mm	900	1000	1200	1400	1600	1800	2000
Manhole internal Dia (MH ID) in mm	MH ID (in mm)	1500	1500	1750	2000	2200	2300	2500
Circumferential reinforcement in wall	0-3.5m Depth	#10@250 c/c		#10 @ 250 c/c				
Vertical Reinforcement in wall	#8 @ 140 c/c						Base slab thickness	
Base slab	0-3.5m Depth	Top layer	#12 @120 c/c bothways				350	
		Bottom layer	#10 @200 c/c bothways					

PROJECT NAME:
UJJAIN UNDERGROUND SEWERAGE SCHEME

CLIENT:
COMMISSIONER UJJAIN MUNCIPAL CORPORATION
DIST. UJJAIN (MP)

CONSULTANT:
वाप्कोस लिमिटेड
WAPCOS LIMITED

DRAWING NAME:
DRAWING FOR RCC MANHOLES
WITH DROP CONNECTION AND HIGH FLOOD
PROTECTION SYSTEM

DATE:	NTS	PAGES :

NTS - DRAWING NOT TO THE SCALE. FOLLOW WRITTEN DIMENSION